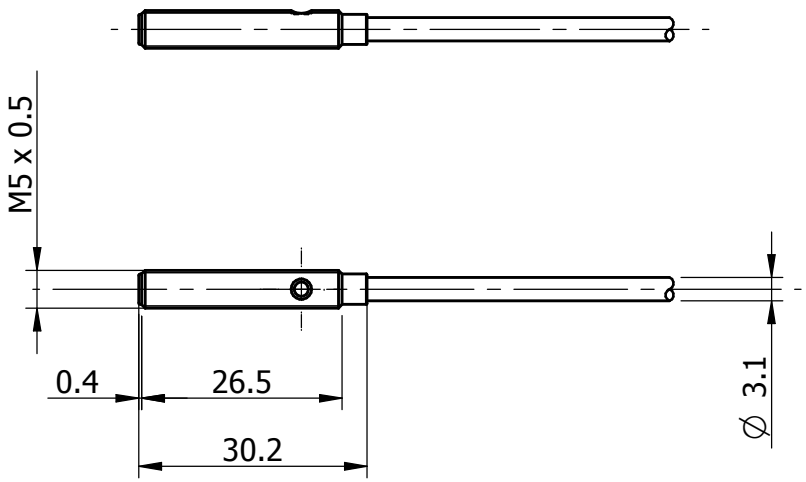
M5 x 0.5
0.4
26.5
30.2
∅ 3.1